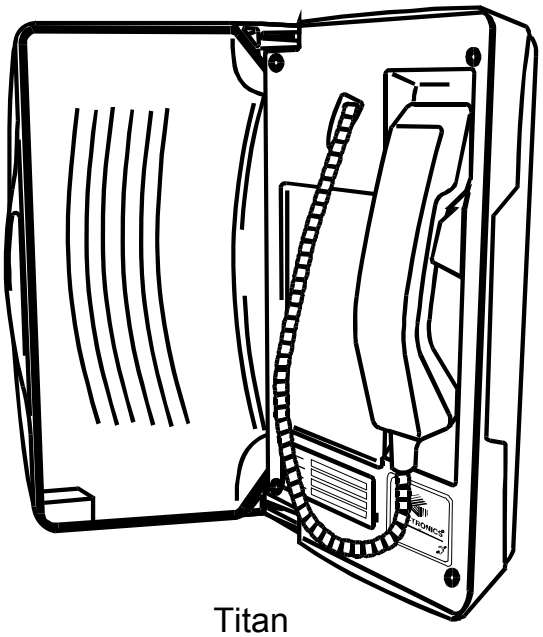

Titan

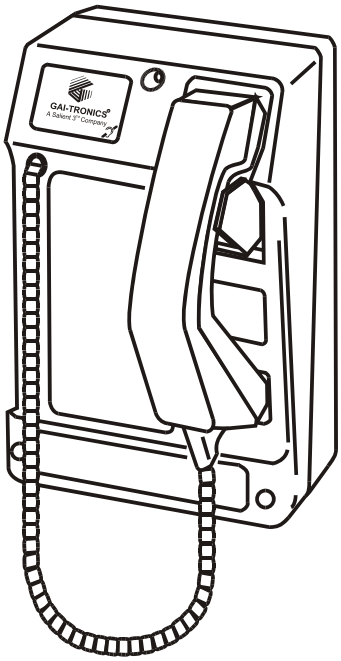

Commander

Installation and User Guide

Titan Telephone (1088)
Commander Telephone (1089)

SMART models

GAI-TRONICS

.

Doc. No. 502-20-0114-001 Iss2. Dec 2007 (CN33056-001)

CONTENTS

1. Safety and Care Information 4
2. Product Description 4
   - 2.1. Changes from previous versions 5
   - 2.2. Titan features 5
   - 2.3. Commander features 6
3. Operation / Testing 6
   - 3.1. Making and Receiving calls 6
   - 3.2. Last Number Redial 6
   - 3.3. Secrecy (Mute) 6
   - 3.4. Recall Function 6
   - 3.5. Call timer 7
4. SMART features 7
5. Installation 7
   - 5.1. General 7
   - 5.2. Emergency Services warning 8
   - 5.3. Titan 8
   - 5.4. Commander 10
6. Mounting methods and dimensions 10
   - 6.1. General 10
   - 6.2. Titan 11
   - 6.3. Commander 15
7. Connections 17
   - 7.1. Standard connections 18
   - 7.2. Additional hook contact 19
   - 7.3. Optional external inputs 19
   - 7.4. Optional signal outputs 20
   - 7.5. Supplementary Power supply 20

8. Programming and Option Settings 20
8.1. Quick Programming Guide (using a tone phone). 20
8.2. Further programming options 22
8.3. TMA 22
9. Aftercare 23
10. Technical Specifications 24
11. CE Declaration 27

1. Safety and Care Information

▲ **The safety of the user/installer relies on the isolation of the telephone network and not on the earthing of the case**

▲ **The spring-loaded door (Titan models only, where fitted) can close sharply. Take care not to trap fingers etc., during installation and use.**

▲ **Please read these instructions thoroughly before starting installation. These products must be installed by competent personnel familiar with telephone installation.**

▲ **Telephone network voltages can be hazardous. Take adequate precautions when opening the case or installing. If in doubt, disconnect the telephone line elsewhere before accessing the line connections.**

▲ **For increased protection against lightning transients, attach a local earth to the main terminal block (see section 7)**

2. Product Description

This manual describes SMART versions of the Titan and Commander telephone ranges. SMART stands for Self Monitoring And Reporting Telephone - a family of intelligent, processor-based products giving many advanced features from a line -powered analog telephone. Models are available with full numeric keypads for manual dialling, with auto-dial buttons for dialling pre-stored numbers from a single button press, or without any buttons. Common keypad layouts are shown below.

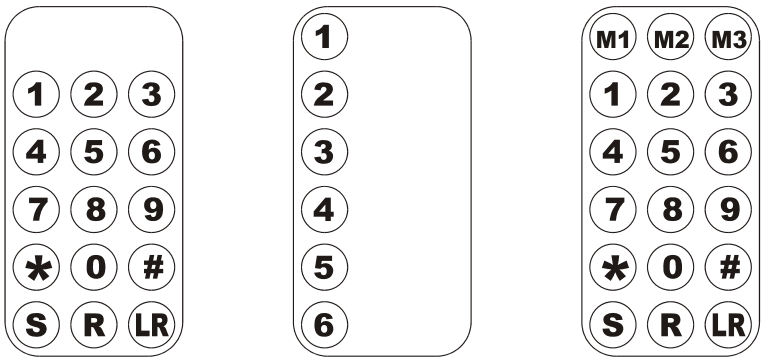

Full numeric keypad 15 button | Auto-dial only (6 memory buttons shown) | Full numeric with 3 auto-dial memories (18 button)

Although functionally and electrically identical, (i.e. the operation, programming and connection details are common), Titan and Commander differ physically, so the installation and mounting details are described separately.

2.1. Changes from previous versions

This manual describes an updated range of products introduced in June 2006. For those familiar with GAI-Tronics' products, the list of new or changed features is as follows:

- New terminal layout (section 7.1).
- Increased lightning protection (section 10).
- No separate Cap-Shunt link (ringing is permanently enabled).
- Compliance with railway EMC standards (section 10)
- Second hookswitch option (section 7.2)
- Optional additional inputs and outputs
- RoHS compliant

For the full list of product features, please see the specifications in section 10.

2.2. Titan features

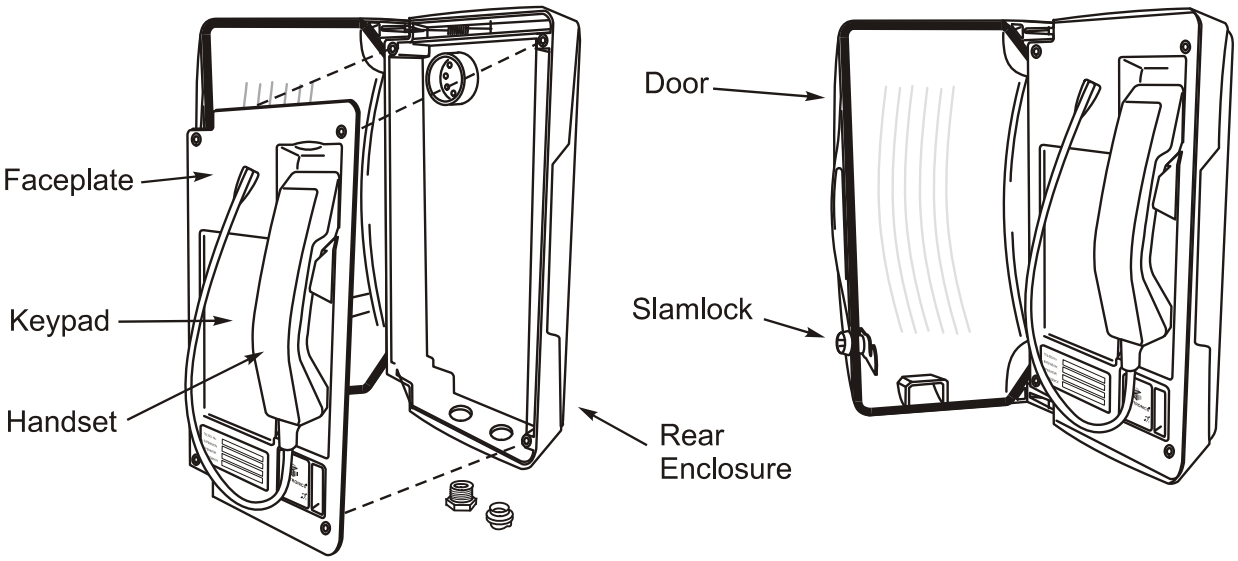

Titan is a family of rugged, weather-resistant metal-bodied telephones available with a range of handset types, keypad configurations, colours and enclosures, based around a common faceplate style.

Most Titans are equipped with a heavy-duty spring-loaded door, but models are available without door and also as faceplate only, for flush mounting.

Titan doors may be fitted with slamlocks opened by an 8mm square socket key.

2.3. Commander features

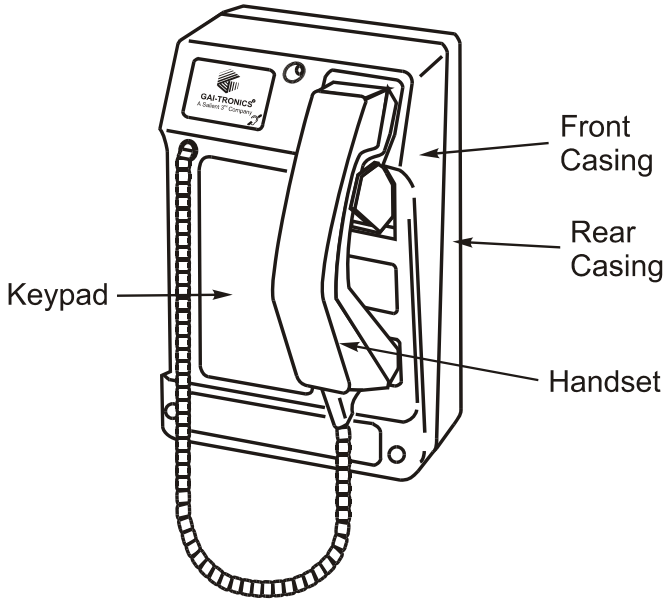

Commander is a family of rugged, weather-resistant telephones manufactured from moulded glass-reinforced polyester. A range of handset types and keypad configurations are available.

3. Operation / Testing

3.1. Making and Receiving calls

To make a call, lift the handset, wait for dial tone, dial required digits (or press required memory button or Last Number Redial where provided) and wait for connection.

To end a call, replace the handset in its cradle.

To receive a call, lift the handset when ringing is heard.

3.2. Last Number Redial

(15 and 18 button versions only)

Lift the handset, press LR to redial the last dialled number.

3.3. Secrecy (Mute)

(15 and 18 button versions only)

- During a call, press and hold the S button to mute the microphone.

3.4. Recall Function

(15 and 18 button versions only)

When a call is in progress, press R to send a “recall” signal to the exchange. Only time-break recall signals can be generated. The factory default recall break is 100ms, but can be set to other values (see section).

3.5. Call timer

The phone has a programmable call timer that can limit the maximum call duration.

When ON, the timer forces the phone back off line after the preset time. This prevents the line remaining tied if the handset is left off-hook. The timer is factory-set to 7mins by default, but can be set to any value (up to 2¾hrs) or disabled. See section 8.2.1.

4. SMART features

This family of products has a wide range of intelligent features including:

- Monitoring of faults and health status
- Remote programming of auto-dial numbers and configuration parameters
- Alternate day / night autodial numbers
- Call logs for calls made to and from the telephones

These features are all available over standard, 2 wire telephone lines with no external power required at the phone.
To use these features, GAI-Tronics provide a Telephone Management Application (TMS) available separately, see section 8.3.

5. Installation

5.1. General

IMPORTANT

All possible measures must be taken to ensure water, fluid or dust does not contaminate the internal components of the telephone whilst unpacking, preparing and installing the telephone in inclement weather conditions or by negligence.

Failure to do so may invalidate your warranty.

These telephones are supplied without connection leads – cabling to the telephone network must be supplied and installed by the installer. Because of this, extra precautions must be observed: installers must ensure that they have the permission of the owner of the PABX or telephone network to which the telephone is to be connected, and that installation is carried out by trained personnel. Contact GAI-Tronics if installation service is required.

IMPORTANT

Installation details differ between the TITAN and COMMANDER product ranges –please make sure you know which product you are installing and refer to the appropriate sections below.

5.2. Emergency Services warning

If the telephone is configured so that it cannot make a direct call to the emergency services, check with your telephone service provider or infrastructure maintainer whether it is necessary to warn users, and if so provide a suitable warning notice. A warning label, which can be fixed to the front of the telephone, is provided.

5.3. Titan

1. To prepare for installation, open the door (where fitted), then undo the four retaining screws to remove the faceplate from the rear enclosure. A 3mm Allen key is required.

   Caution – take care to support the spring-loaded door whilst open to prevent it slamming shut and trapping fingers.

2. All connections are on the lower edge of the circuit board on the rear of the faceplate.
3. The Titan telephone is intended for vertical installation to a wall or pole. Select the required mounting method (section 6) and mount the rear enclosure first where applicable.
4. Route the required cables through glands as appropriate, and make connections following section 7.
5. Re-fit the faceplate ensuring a weatherproof seal

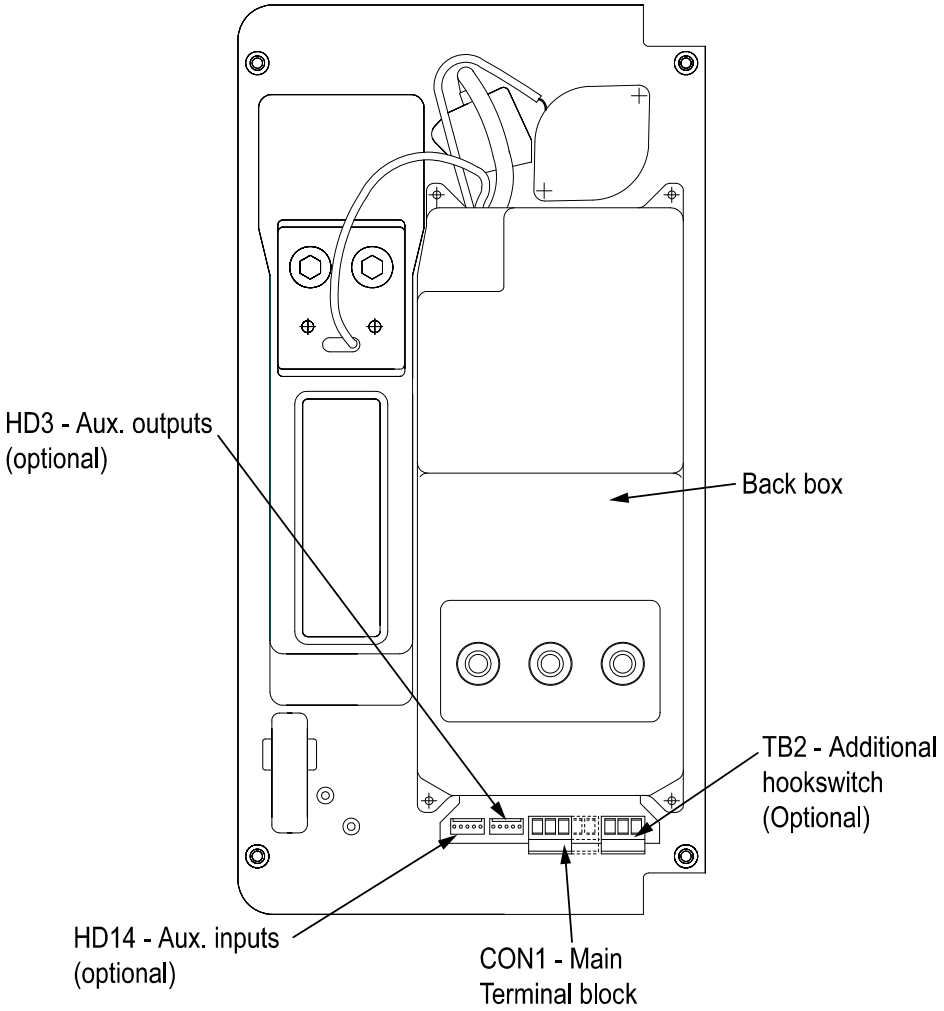

6. Programming or parameter changes can be made remotely, using a tone phone or TMA (see section)
7. Test the operation of the telephone (section 3). Installation is now complete.

5.4. Commander

1. All connections are on the circuit board housed in the front casing.

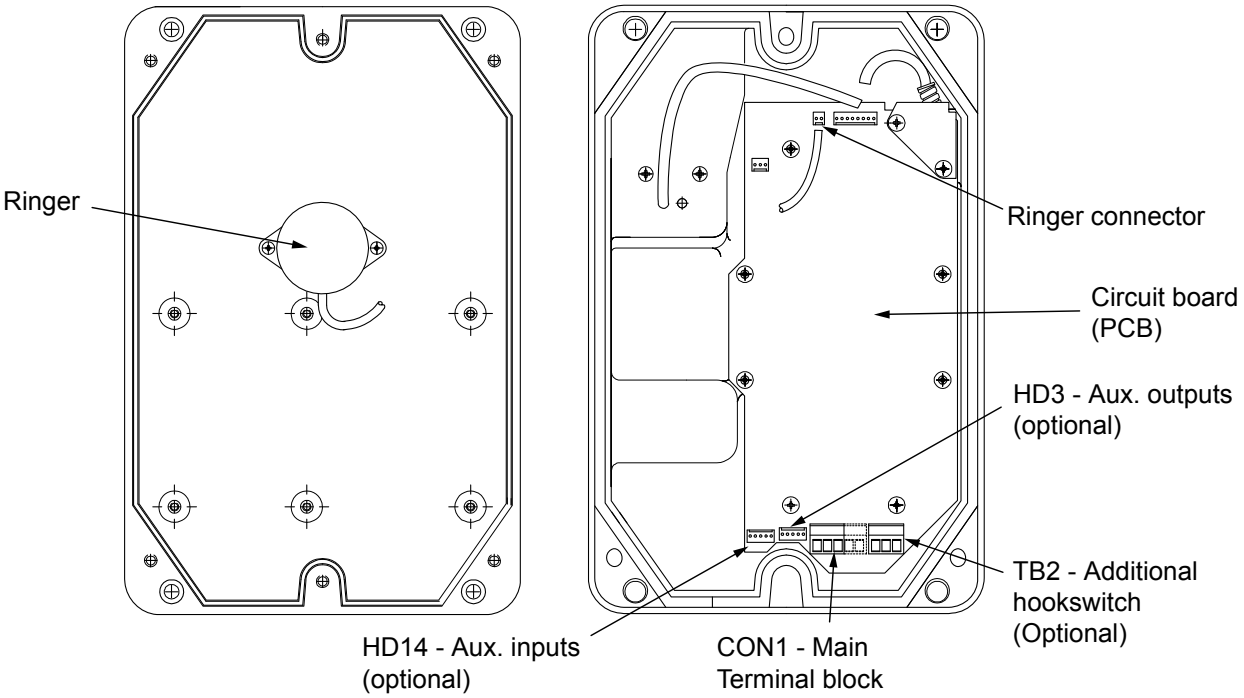

2. To prepare for installation, undo the three retaining screws shown to remove the front casing from the rear. The screws are captive in the front casing; a 5mm Allen key is required. Disconnect the ringer connector from the circuit board, noting the position and orientation.
3. The Commander telephone can be installed vertically to a wall or pole, or used horizontally on a desk. Select the required mounting method (section 6) and mount the rear casing first where applicable.
4. Route the required cables through glands as appropriate, and make connections following section 7.
5. Reconnect the ringer. Re-secure the telephone Front Casing to the Rear Casing with the three retaining screws, ensuring a weatherproof seal.Programming or parameter changes can be made remotely, using a tone phone or TMA (see section)
6. Test the operation of the telephone (section 3). Installation is now complete.

6. Mounting methods and dimensions

6.1. General

IMPORTANT

Installation details differ between the TITAN and COMMANDER product ranges –please make sure you know which product you are installing and refer to the appropriate sections below.

Before mounting the telephone, check the cable routing and requirements. If glands are required, fit them to the case as follows:

1. Remove the RED blanking plug leaving the other (usually BLACK) in place.
   Only fit a second gland if a separate cable is required to the phone (for example for an additional hook contact).
2. Select the appropriate sized gland:
   Use the smaller gland for cables diameters 4 - 7mm.
   Use the larger gland for cable diameters 8 - 13mm.
3. From the outside of the case, insert the selected gland into the threaded cable entry hole and tighten, so that its sealing washer is compressed against the enclosure surface.

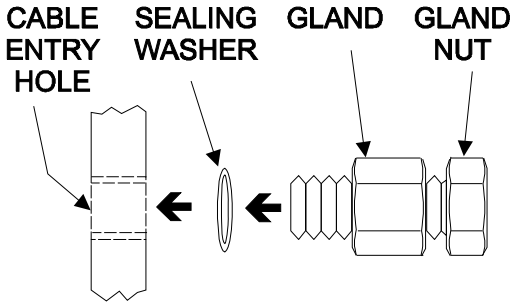

4. Proceed with chosen mounting method below

6.2. Titan

As standard, Titan with rear enclosure is supplied with 2 cable glands with sealing washers, 4 countersunk screws with wall plugs and a 3mm Allen key.

Titan telephones supplied for flush mounting have no rear enclosure – see section 6.2.3 below.

6.2.1 Wall mounting

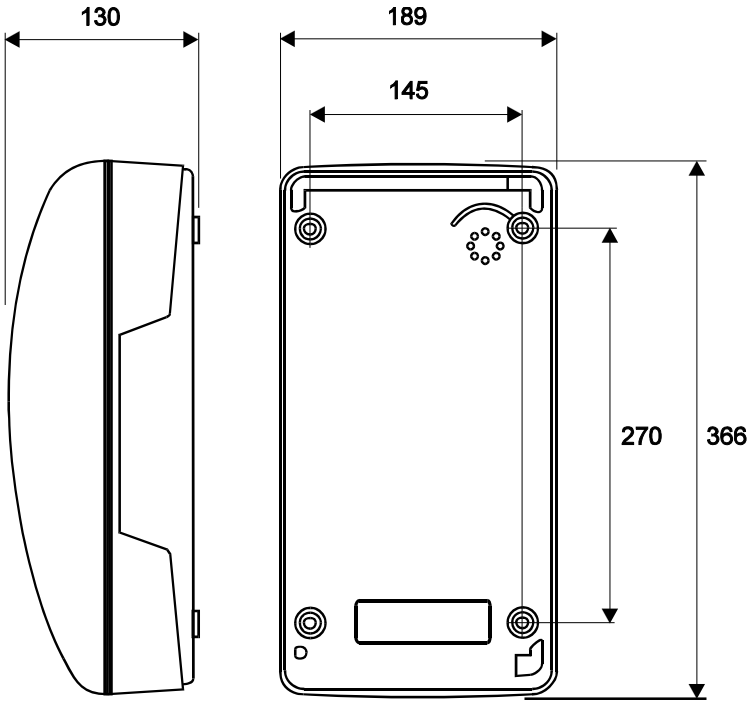

1. Using a suitable tool, punch out the 4 holes in the rear enclosure, taking care not to damage or dislodge the plastic bushes. Only four of the eight holes are required - the outer ones are recommended. The inner holes are provided to be compatible with older-style mounting posts, and should be left intact if not used. If the inner holes are used they must be fitted with the supplied plastic bushes.

WARNING:.*Your warranty will be invalidated if :-*

1. Any fixing hole made in the rear enclosure is left unused.
2. Any additional holes are drilled into the telephone enclosure.
3. Plastic bushes are not used on all fixing holes.

---

2. Mark the wall with hole centres based on the dimensions shown (145 x 270mm). If necessary offer the rear enclosure up to the wall to check alignment. Do not use the enclosure as a template for drilling.

3. Drill holes in the wall on the marked positions. Select appropriate screws, wall plugs etc., for the type of wall, bearing in mind that the weight of the complete phone is around 5kg.

IMPORTANT: **USE ONLY** *countersunk-headed fixing screws. Check that screws seat properly in the plastic bushes to ensure a watertight seal. Do not use excessive tightening force, as this may crack the case.*

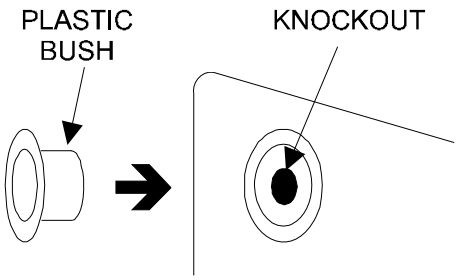

4. Ensure that all four plastic flanged bushes are in place and the rear enclosure is screwed tightly to the surface to prevent any water ingress through the punched holes.
5. Complete the installation by making the appropriate connections (section 7) and re-fitting the face plate.

6.2.2 Pole mounting

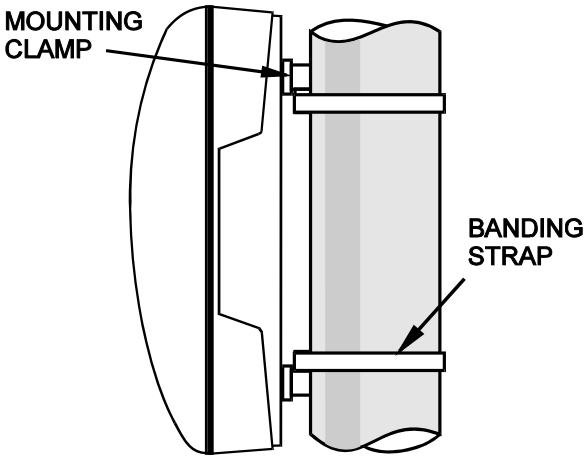

Kit No 100-02-0208-001

This accessory is for mounting GAI-Tronics telephones on to the side of round poles of 100mm to 200mm diameter, or on to square or rectangular section uprights of 100mm to 150mm across the mounting surface.

NOTE:

Banding straps (large scale worm-drive clamps) are not included in this kit and must be obtained separately. For details of where banding can be obtained, refer to GAI-Tronics.

1. After punching through the flanged bushes in the rear enclosure (as described in **WALL MOUNTING**), attach the pole mounting clamp assemblies to the rear enclosure using the M6 x 25 screws provided. Tighten to a torque of 4.5Nm max.
   Note: only use the outer four holes, and ensure that the screws seat properly in the plastic bushes to avoid water ingress.

2. Ensuring that the glands are at the bottom, pass a proprietary banding strap round each of the pole mounting clamps and the support pole. Tighten securely.
3. Continue the installation by making the appropriate connections (section 7) and re-fitting the face plate.
4. Re-tighten the straps firmly and trim off any excess band material. For security the driving head of the band may also be sawn off.

6.2.3 Flush mounting

Titan telephones supplied for flush mounting have a slightly different faceplate to those supplied with a rear enclosure – in particular the fixing holes are in different positions and there are no corner cut-outs (for door hinges). These models are usually described as “Titan fp” and the supplied mounting kit contains round-headed screws and no glands.

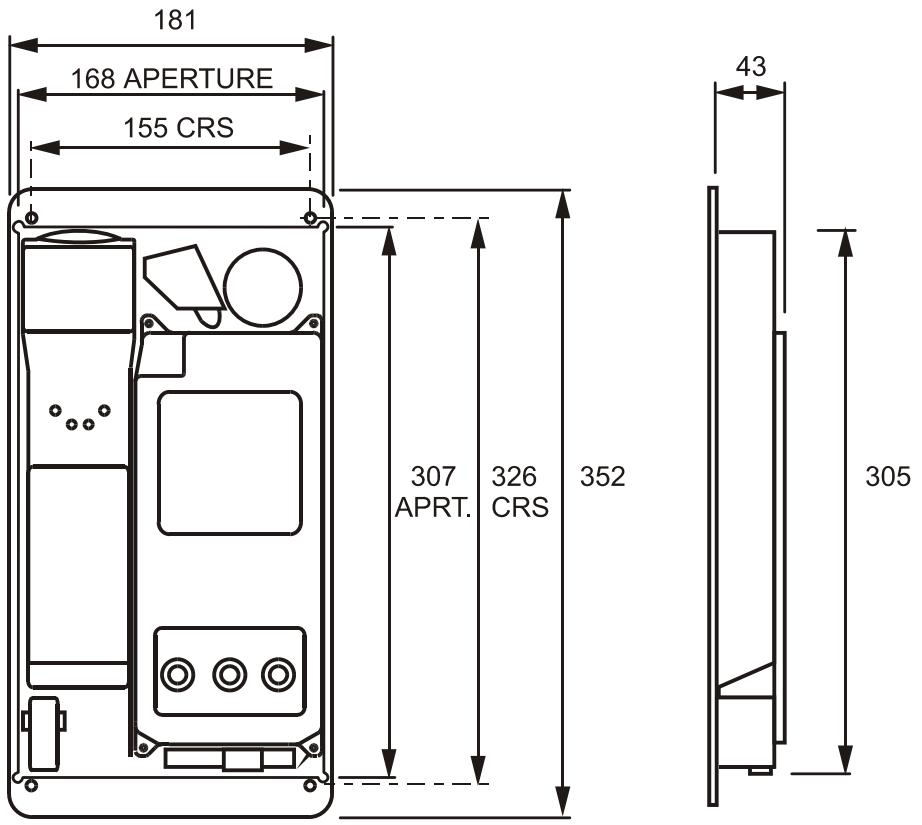

To flush-mount the telephone to a wall:

1. Prepare a recess (at least 50mm deep) in the wall according to the dimensions shown.
2. Mark the wall with hole centres based on the dimensions shown (155 x 326mm). If necessary offer the faceplate up to the wall to check alignment. Do not use the telephone as a template for drilling.

3. Drill holes in the wall at the marked positions. Select appropriate screws, wall plugs etc., for the type of wall, bearing in mind that the weight of the complete phone is around 1.5kg.
4. Route the cable to within the recess, and make connections to the telephone as shown in section 7.
5. Secure the telephone to the wall taking care not to trap any wires. Note that the gasket on the rear of the faceplate is intended to make a weather seal when compressed against a smooth surface. Do not rely on this gasket to keep water out if mounting directly to rough surfaces such as brickwork – in these cases use additional sealant around the edges to ensure a weatherproof seal.

6.3. Commander

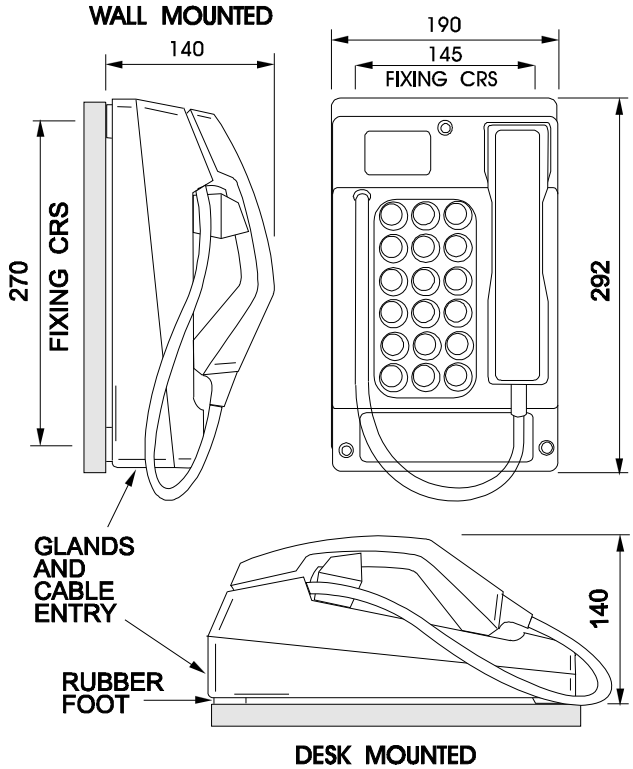

6.3.1 Wall mounting

To ensure weatherproof integrity when wall mounted, external cables should enter the enclosure from the bottom via the 20mm gland entries provided.

IMPORTANT:

Do not drill any extra holes as this will invalidate your warranty.

---

1. Remove rubber feet from the Rear Casing if fitted. Ensuring that the cable entries are at the bottom offer the Rear Casing up to the vertical surface and mark through the fixing holes.
   Do not use the Rear Casing as a template to drill the holes. Work only from the marked positions.

2. Drill the holes in the vertical surface to suit the best method of fixing.
3. Ensure the Rear Casing is securely attached to the vertical surface using the four 7mm diameter screw holes provided. No sealing washers are necessary.

IMPORTANT: *Do not use countersunk headed fixing screws. Only use round head, socket cap head or pan head screws. Take care not to over tighten the screws, doing so may damage the case and will invalidate your warranty.*

4. Continue the installation by making the appropriate connections (section 7).
5. Reconnect the ringer. Secure the telephone Front Casing to the Rear Casing.

6.3.2 Pole mounting

Kit No 100-02-0208-001

This accessory is for mounting GAI-Tronics telephones on to the side of round poles of 100mm to 200mm diameter, or on to square or rectangular section uprights of 100mm to 150mm across the mounting surface. For flat mounting on surfaces greater than 150mm across use the desk or wall mounted methods as appropriate.

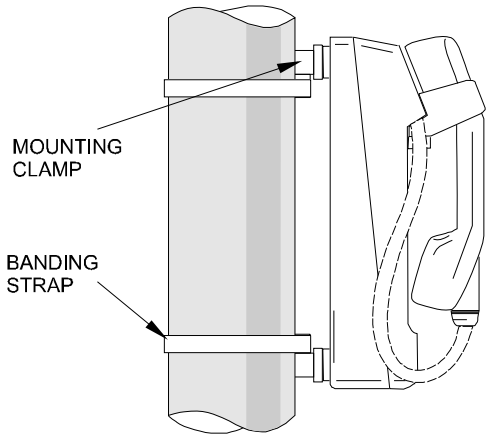

NOTE:

Banding straps (large scale worm-drive clamps) are not included in this kit and must be obtained separately. For details of where banding can be obtained, refer to GAI-Tronics.

1. Remove rubber feet from the Rear Casing if fitted. Attach the pole mounting clamp assemblies to the Rear Casing using the M6 x 25 screws provided. Tighten to a torque of 4.5Nm max.
2. Ensuring that the glands are at the bottom, pass a proprietary banding strap round each of the pole mounting clamps and the support pole. Tighten securely.

3. Continue the installation by making the appropriate connections (section 7).
4. Reconnect the ringer. Secure the telephone Front Casing to the Rear Casing.
5. Re-tighten the straps firmly and trim off any excess band material. For security the driving head of the band may also be sawn off.

6.3.3 Desk mounting / Rake

For horizontal surfaces greater than 150 x 280mm use the free-standing desk mounted method below.

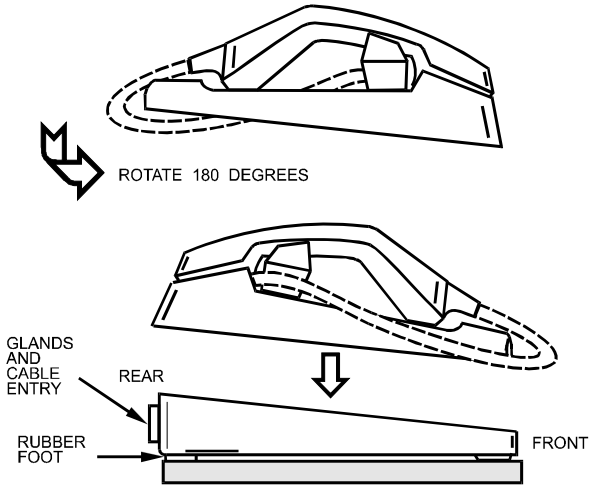

To provide a 'rake' for convenient operation, the Front Casing may be turned through 180° before it is fitted to the Rear Casing. Thus the cable entries are at the rear of the telephone.

1. Ensure that the supplied rubber feet are fitted to the underside of the Rear Casing.
2. Rotate the Front Casing through 180° taking care not to trap any wires.
3. Continue the installation by making the appropriate connections (section 7).
4. Reconnect the ringer. Secure the telephone Front Casing to the Rear Casing.

7. Connections

If glands are used, insert the cable through the gland body and tighten the gland nut sufficiently to clamp the cable, making a seal. Ensure sufficient cable is left to allow removal of the faceplate or front casing without straining the cable.

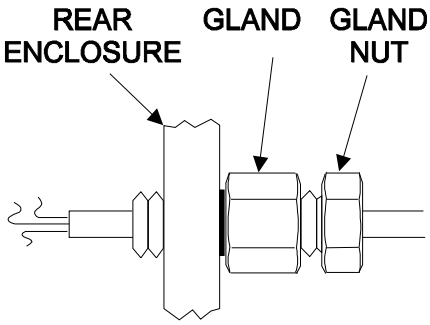

IMPORTANT: If only one gland entry is used, the blanking plug fitted to the second gland position must be left in place.

7.1. Standard connections

Connect the telephone line A and B to the main terminal block CON1 as shown.

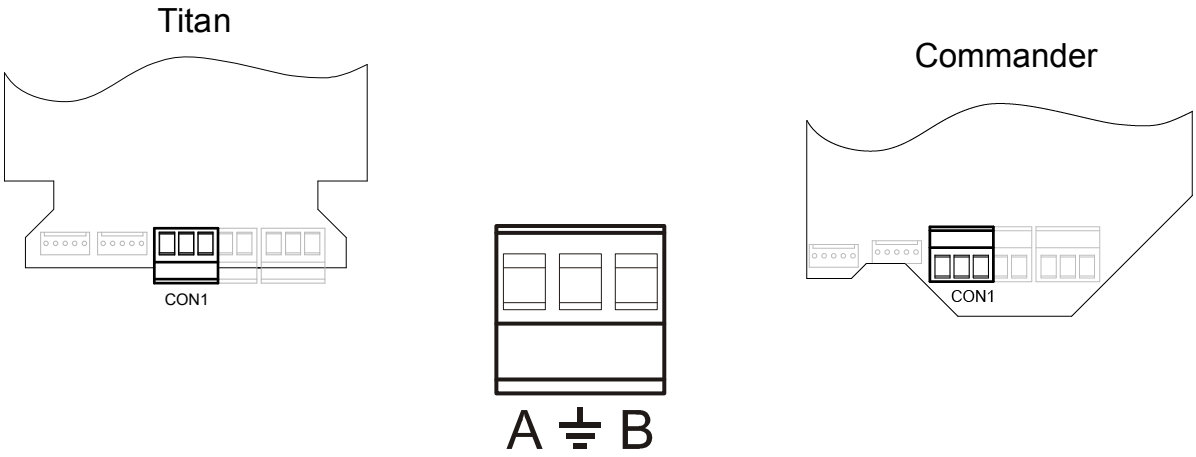

The centre earth terminal is intended as an optional connection to a local earth for the purpose of enhanced protection from lightning transients, and is not required in terms of user safety from the telephone network.

Note: *Conductor sizes to be 0.5mm-2.5mm^2 (flexible cable); 0.5-4.0mm^2 (solid cable) The terminal block can be disconnected from the circuit board for easier installation*

Cabling must not infringe European Low Voltage Directive (LVD) 73/23/EEC.

7.2. Additional hook contact

Note – this optional connection is only available if specifically ordered. Contact GAI-Tronics for details.

The additional hook contact is provided on TB2. The diagram shows the state of the changeover contacts when the telephone is on hook. These contact labels are also on the circuit board.

The switch is operated by the presence of the handset on its cradle. It is a voltage-free switch providing functional and basic insulation from the telephone network. It is intended to be connected to a TNV-3 or SELV circuit as defined by EN 60950-1:2001.

Switch maximum ratings (resistive load):

50 Vrms

75 VDC

300mA

3W

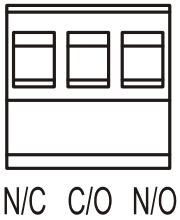

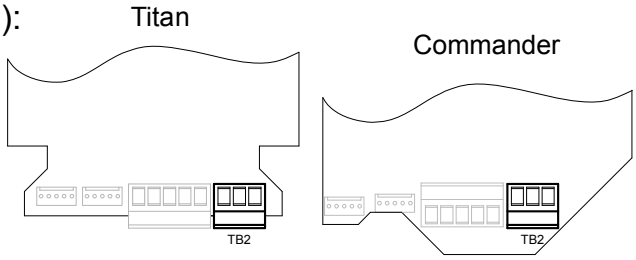

The circuit is not fused.

It is recommended that the switch cabling is routed via the spare gland in the case.

7.3. Optional external inputs

SMART products can be equipped with 4 external inputs, which can be used to generate call-in events or alarm reports (using TMA). Note – these optional connections are only available if specifically ordered. Contact GAI-Tronics for details.

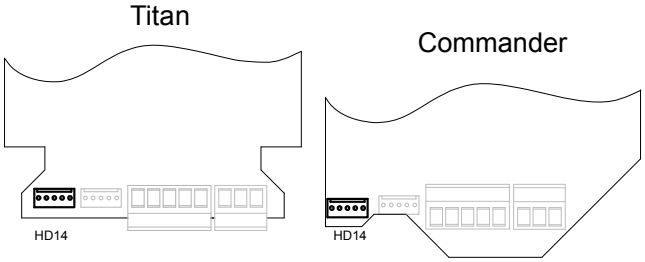

The inputs are provided on HD14 as shown, and are also labelled on the circuit board. Control inputs are for connection to voltage free contacts only. Internal pull-up resistor source current = 33µA. These inputs form part of a TNV3 circuit and precautions must be taken to prevent hazardous voltages being applied to these circuits.

NB these inputs are not isolated from the telephone network.

7.4. Optional signal outputs

SMART products can be equipped with external outputs, controlled by the telephone software. Note – these optional connections are only available if specifically ordered. Contact GAI-Tronics for details.

The additional outputs are provided on HD3 as shown and are isolated SELV outputs as defined by EN 60950-1:2001.

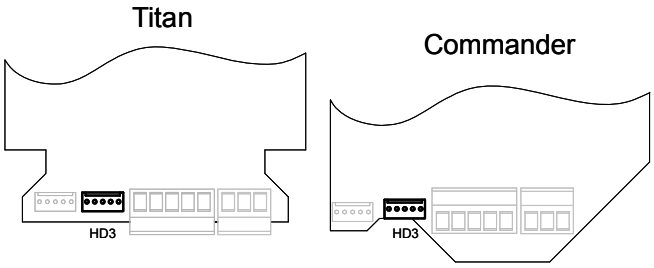

7.5. Supplementary Power supply

SMART products can be equipped with a supplementary power supply, usually required for the operation of signal output relays. Note – this option is only available if specifically ordered. Contact GAI-Tronics for details.

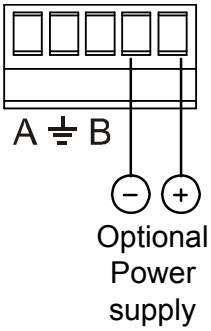

The standard telephone does not require this supplementary supply for normal operation.

The supplementary power input is provided on CON1A as shown and must be an earth-free isolated supply of 9-12V dc (250mA min) to suit the power requirements of the required peripherals, suitable for connection to a TNV-3 circuit. A common supply cannot be used for multiple telephones.

8. Programming and Option Settings

Programming and option setting is done remotely by sending commands down the telephone line to the unit. This can be done by either using a tone phone, or by using GAI-Tronics TMA - a PC software application.

8.1. Quick Programming Guide (using a tone phone).

Autodial memory numbers can be programmed remotely using a tone dialling (DTMF) telephone. The procedure is as follows:

1) Lift the handset of the tone dialling telephone.

2) Dial the number of the telephone to be programmed.
3) Listen for the ringing tone in the handset earpiece.
4) After 4-5 rings a beep will be heard, immediately after the beep press the star key three times. Note the number of rings before the beep is heard is user configurable, this may be set between 0 and 15 rings before the beep is sent.
5) The SMART telephone should now stop ringing. Pause for 3 seconds.
6) Enter the factory preset PIN Number (**0000). Pause for 3 seconds.
7) To program Memory 1, Press *101 followed by your required number for the first Memory Button then hash (#) to complete. The smart phone should confirm acceptance with a 'beep'.
8) For Memory 2 follow the same procedure, but this time begin with *102, followed by your required number for the second Memory Button then hash (#) to complete. Wait for the confirmation tone.
9) Continue this procedure for all remaining Memory buttons, as required.
10) When programming is complete, Press *99 to activate remote 'Hang-up' function.

Example:

Programming requirement	Command Digits
Program Memory 2 with 01234 567890	*102 01234567890#

Trouble Shooting

The SMART Telephone should only return a 'beep' after a Programming command has been sent. If the SMART phone 'beeps' *during* Command entry, then you should try the following:

1) Problems may occur when the SMART phone is unable to distinguish between the different command strings and that's why it's important to pause after the initial entry of the '***' command. Also make sure that you are leaving a three-second gap after entering the default PIN code. If this is not the case, then you should begin the above programming procedure again. (Starting at 5)
2) Has the default PIN code already been changed by another user? Check your own records and enter the correct PIN code as necessary. Note that this problem can only occur if you are carrying out a re-programming exercise. Telephones always leave the factory with the value **0000 set as default.
3) After entering the PIN code you can check that it has been received and understood by the SMART Telephone –Wait three seconds and enter the command *20. If all is ok then you will here a string of 6 DTMF tones in the handset earpiece of your tone dialling phone. You can now assume that it's ok to continue with your required programming (Starting at 8)

8.2. Further programming options

In addition to programming auto-dial numbers, several other features can be programmed using a tone-phone.

8.2.1 Time-out

The call time out is factory set to 7 minutes, meaning that the phone will drop the call and go back on hook electronically after this period even if a call is in progress. This feature is provided to guard against the handset being left off hook and tying up the line.

The timer can be set in increments of 10s from 60s to 9980s by entering the code *50, followed by the required timeout divided by 10s, followed by #.

For example to set the timer to 3 minutes enter *50 18 # (3min is 180s, 18 is 180/10).

This command must be entered between entering the PIN and closing the phone down with *99.

To disable the timer use a value of 999, ie *50 999 #.

The phone will respond to a successful command with a single tone.

8.2.2 Inserting a pause into an auto-dial number

To enter a pause (approx 1 second gap) into a dial number, use the digits *1.

For example to program 9 <pause> 12345 into memory 1, use

*101 9 *1 12345 #

8.3. TMA

GAI-Tronics TMA is a fully featured software application (Telephone Management Application) for Windows™ XP, offering the facilities to program, maintain, monitor and report on all types of GAI-Tronics SMART products.

Full details on the configuration and use of TMA are provided with the package itself.

Contact GAI-Tronics for further details.

TMA part numbers:

TMA package (UK):	100-02-0309-001
TMA package (Europe):	100-02-0309-002

Each package includes the TMA software (including comprehensive help documentation and installation instructions), external modem and dongle.

9. Aftercare

The purchase of your GAI-Tronics product does not end our commitment to you.

In addition to our warranty obligations, GAI-Tronics are able to offer various levels of maintenance packages, installation and commissioning packages and technical support, from ad-hoc repairs to full maintenance contracts.

By choosing GAI-Tronics as your aftercare provider you are ensured of manufacturer expertise and ISO 9000-certified quality control standards throughout the life of the product.

We can also supply a full range of accessories including mounting posts, beacons and high-volume sounders.

Contact GAI-Tronics for details. www.gai-tronics.co.uk

10. Technical Specifications

Operational Requirements	
Systems.	• Analogue Public Switched Telephone Network (PSTN) • Private Automatic Branch Exchange (PABX)
Not suitable for connection to:	• Payphone extensions • Public Emergency Telephone System (PETS)
Telephone line parameters	• Ring Voltage: 30V to 100V rms, 20Hz to 50Hz • Line voltage 20 to 70 Vdc • Loop current ≥ 15mA
Note: these telephones have been designed for pan-European single terminal connection to the PSTN. However, due to differences between the individual PSTNs & PABXs provided in different countries, this does not, of itself, give an unconditional assurance of successful operation on every PSTN or PABX termination point.	
Product features	
Power supply	100% line power.
Hookswitch	Electronic with no external moving parts
Ringer loudness	80dBA @ 1m
Handset	Suitable for inductive coupling to Hearing Aids having a `T' switch position. Tested to ETS 300-381
Dialling and recall mode	MF only. TBR only.
Monitored faults and sensors	• Hookswitch • Handset integrity loop • Brown out (power failure) • Call log full • 4 auxilliary inputs (optional)
Parameters configurable with TMA	• Autodial numbers - including time-switched alternate numbers • Speech receive level. • Rings before / after auto-answer • Time out (default 7 minutes) • Mute before dial • DTMF detection window
Monitoring method	• Remote polling (initiated by TMA) • Call-in (initiated by the telephone at a preset time)

Environmental limits	
Temperature:	Operating: -20ºC to +60ºC Storing: -40ºC to +70ºC
Relative Humidity	Up to 95% (non-condensing)
Ingress Protection	IP65. (Titan with door closed IP66) to EN60529:1992 – Degrees of protection provided by enclosures.
Physical characteristics	
Casing material	Die-cast Aluminium (Titan) Glass reinforced polyester (Commander)
Handset Material	Cycoloy (2850) with stainless steel or polyester curled cord.
Weight	3 –5kg depending on option.
Dimensions	Dependant on model and variant. See 6.1 (Titan) or 6.3 (Commander)

Recycling information	The symbol shown here and on the product means that the product is classed as Electrical or Electronic Equipment and should not be disposed with other household or commercial waste at the end of its working life. The Waste of Electrical and Electronic Equipment (WEEE) Directive has been put in place to recycle products using best available recovery and recycling techniques to minimise the impact on the environment, treat any hazardous substances and avoid the increasing landfill. Business users should contact their suppliers and check the terms and conditions of the purchase contract and ensure that this product is not mixed with other commercial waste for disposal.

Compliance to standards	
European Directives	1999/5/EC – European Radio & Telecommunications Terminal Equipment Directive. 2002/96/EC - Waste Electrical and Electronic Equipment (WEEE) Directive 2002/95/EC - Restriction of the use of certain hazardous substances in electrical and electronic equipment (RoHS)
EMC	EN55022:1998 (+A1:2000 + A2:2003) – Information technology equipment. Radio disturbance characteristics. EN55024:1998 (+A1:2001 + A2:2003) – Information technology equipment. Immunity characteristics. EN 50121-4: 2000 - Railway applications, emission and immunity RT/E/S/30003 iss1 1999 – The performance of Telecommunications Equipment under Conditions of Electrical Interference
Safety	EN60950-1:2001 (+A11:2004) – Specification for information technology equipment, including electrical business equipment. BS6317:1992 (Clause 13.9) - Specification for simple telephones for connection to public switched telephone networks run by certain public telecommunication operators. EN50371:2002 - Generic standard to demonstrate the compliance of low power electronic and electrical apparatus with the basic restrictions related to human exposure to electromagnetic fields (10 MHz - 300 GHz). General public.
Telephony	ES 203 021 - Access and Terminals (AT); Harmonized basic attachment requirements for Terminals for connection to analogue interfaces of the Telephone Networks. EN 301 437 - Terminal Equipment (TE) - Attachment requirements for pan-European approval for connection to the analogue Public Switched Telephone ES 201 729 - Public Switched Telephone Network (PSTN) - 2-wire analogue voice band switched interfaces; - Timed break recall (register recall); - Specific requirements for terminals ETSI TBR38: May 1998 - Requirements for pan-European connection to telephone networks
Lightning and transients	ITU-T recommendation K.21 (07/2003) - Enhanced surge protection.

11. CE Declaration

GAI-TRONICS
A division of Hubbell Limited

Declaration of conformity

In accordance with European directive 1995/5/EC (R&TTE)

We, GAI-Tronics, a division of Hubbell Limited, of Brunel Drive, Stretton Park, Burton upon Trent, Staffordshire, England, DE13 0BZ, declare under our sole responsibility that the following product is in conformity with the directives and standards listed below and hold the relevant technical documentation at the above address.

Product description	Commander (1089) Titan (1088)

EC Directive	**Notes**
1999/5/EC	European Radio Equipment & Telecommunications Terminal Equipment Directive.
2002/95/EC	Restriction of certain Hazardous Substances Directive (RoHS).

Standards applicable	**Notes**
EN55022:1998 + A1:2000, A2:2003 – Information technology equipment. Radio disturbance characteristics. EN55024:1998 + A1:2000, A2:2003 – Information technology equipment. Immunity characteristics.	EMC
EN60950-1:2001+ A11:2004 – Specification for information technology equipment, including electrical business equipment. EN50371:2002 - Generic standard to demonstrate the compliance of low power electronic and electrical apparatus with the basic restrictions related to human exposure to electromagnetic fields (10 MHz - 300 GHz). General public	Safety

Date of issue	**Name/Title of authorised signatory**	**Signature of signatory**
6 – 10 – 2006	G.R. LINES BUSINESS UNIT MANAGER	

QC 300 / 8

GAI-TRONICS
A division of Hubbell Ltd.

Brunel Drive
Stretton Park
Burton on Trent
DE13 0BZ
England
Tel: 01283 500500
Fax: 01283 500400
www.gai-tronics.co.uk